schaffner
MORE POWER TO YOU

Ecosine Evo, 400 VAC 60 Hz Full Performance Passive Harmonic Filters

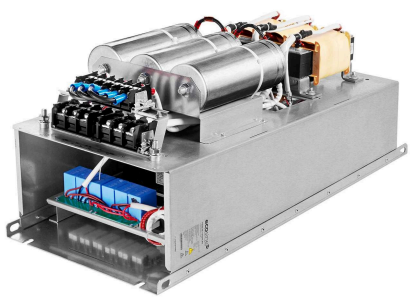

- The industry standard for 6-pulse rectifier and motor drives
- Filters for diode rectifier with or without DC-link choke and thyristor rectifier
- Best-in-class partial load performance
- Most compact design
- Plug and play, ready to use

Approvals & Compliances

(depending on filter configuration)

Features and Benefits

Schaffner ecosine harmonic filters represent an economical solution to the challenge of load-applied harmonics mitigation in three-phase power systems. With a plug-and-play approach and more compact dimensions than comparable products, they can be quickly installed and easily commissioned. They increase the reliability and service life of electric installations, help utilize electric sytem capacity better, and are the key to meet Power Quality standards such as IEEE 519. Ecosine filters reshape your distorted current back to the desired sinusoidal waveform. Schaffner ecosine filters can be applied to virtually any kind of power electronics with front-end six-pulse rectifiers, 3-phase diode or thyristor bridges, where harmonic current distortion needs to be reduced to defined limits.

Typical Applications

- Equipment with front-end six-pulse rectifier
- Motor drives
- Factory automation equipment
- Water/wastewater treatment facilities
- Fan and pump applications
- HVAC installations
- Mission-critical processes
- DC fast chargers

Typical electrical schematic

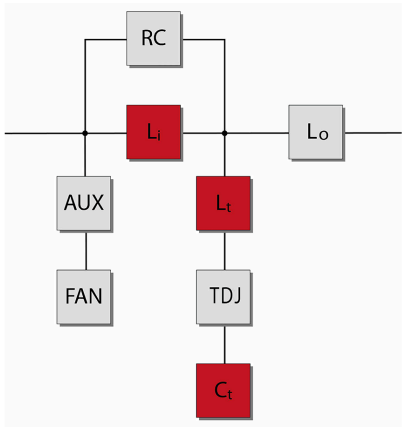

Technical Specifications

Nominal operating voltage	3x380 VAC to 415 VAC +-10%
Operating frequency	60 Hz ±1 Hz
Nominal motor drive input power rating	1 to 240 HP
Total harmonic current distortion THDi*	<5% at rated power
Total demand distortion TDD	According to IEEE 519
Efficiency	>98% for rated voltage and power
Overload capability	1.6x rated current for 1 minute, once per hour
SCCR**	100 kA
High potential test voltage	P –> E 2160 VAC (1 s)
Overvoltage category	OV III (IEC 60664-1 / UL 61800-5-1)
Earthing System	TN, TT, IT
Protection category	IP 00, IP 20*****
Cooling	Internal fan cooling or external cooling***
Ambient temperature range	–25°C to +45°C fully operational +45°C to +70°C derated operation**** –25°C to +85°C transport and storage
Design corresponding to	Filter: UL 61800-5-1, EN 61800-5-1 Chokes: EN 61558-2-20 or EN 60076-6
Flammability corresponding to	UL 94 V-2
MTBF @ 45°C/400 V (Mil-HB-217F)	> 200'000 hours

* System requirements: THDv <2%, line voltage unbalance <1%
* Note: performance specifications in this brochure refer to six-pulse diode rectifiers.
* SCR rectifier front-ends will produce different results, dependent upon the firing angle of the thyristors.
* THDi ~5% at rated power for filter <6 kW/HP
** External UL-rated fuses required. Please consult the user manual.
*** Please check the inlet air flow required for cooling table further in this document and the user manual.
**** Iderated = Inominal*SQRT((Tmax-Tamb)/(Tmax-Tnominal)) = Inominal*SQRT((70°C-Tamb)/25°C)

Filter Selection Table @ 380 V / 60 Hz – IP 00 Enclosure

Filter	Rated load power @ 380 V/60 Hz [kW]	[HP]	Motor drive input current [Arms]***	Rated filter input current [Arms]	Weight [kg]	[lbs]	Typical losses [W]****	Terminal	Frame size
FN 3442-1-110-E0_ _ _ _ _*	0.9	1.2	2	1.37	6	12.6	50	110	A
FN 3442-2-110-E0_ _ _ _ _*	1.7	2.4	4	2.74	8	17.4	67	110	A
FN 3442-4-112-E0_ _ _ _ _*	2.9	4	7	4.57	10	22	116	112	B
FN 3442-6-112-E0_ _ _ _ _*	4.5	6	11	6.91	13	29	132	112	B
FN 3442-8-112-E0_ _ _ _ _*	5.9	8	14	9.29	16	35	160	112	C
FN 3442-12-112-E0_ _ _ _ _*	8.7	12	21	13.8	18	40	237	112	C
FN 3442-16-113-E0_ _ _ _ _	11.9	16	27	18.5	27	60	294	113	D
FN 3442-20-113-E0_ _ _ _ _	14.9	20	34	23.1	31	68	351	113	D
FN 3442-24-113-E0_ _ _ _ _	17.4	24	44	27.8	36	79	354	113	D
FN 3442-32-115-E0_ _ _ _ _	23.8	32	52	37.2	46	101	459	115	E
FN 3442-40-115-E0_ _ _ _ _	29.3	40	66	46.2	51	112	571	115	E
FN 3442-48-115-E0_ _ _ _ _	35.6	48	83	55.6	59	130	589	115	E
FN 3442-60-115-E0_ _ _ _ _	44.3	60	103	69.3	60	132	821	115	F
FN 3442-80-115-E0_ _ _ _ _	59.4	80	128	92.5	82	181	1028	115	F
FN 3442-100-116-E0_ _ _ _ _	73.6	100	165	115	116	256	1067	116	G
FN 3442-120-116-E0_ _ _ _ _	88.7	120	208	139	137	302	1143	116	G
FN 3442-160-118-E0_ _ _ _ _	118	160	240	184	170	375	1538	118	H
FN 3442-200-118-E0_ _ _ _ _**	147	200	320	231	187	412	1411	118	H
FN 3442-240-118-E0_ _ _ _ _**	177	240	403	279	252	556	1775	118	H

* Filter rating which does not require forced cooling or fan module
** Filter rating which does not require RC damping module for rectifiers with EMI filter
*** Motor drive input current without harmonic filter
****Typical losses @ 45°C, 380V, 60Hz and rated load power

Filter Power Terminals

Terminal designation*	Screw thread	Stranded wire AWG	Stranded wire [mm²]	Screw torque [Nm]	[lbs·in]	Max width** cable lug [mm]	Frame size
110	M3	14-22	0.4-2.5	0.5	4.4	7	A
112	M4	10-22	0.4-6	1.2	10.6	10	B, C
113	M6	6-18	0.75-16	3	26.6	15	D
115	M8	1/0-8	10-50	8	70.8	15	E, F
116	M8	3/0-8	10-95	8	70.8	17	G
118	M10	3/0-500 kcmil	95-240	10	88.5	35	H

* Recommended connector type: wire or cable lug for 110 to 113, only cable lug for 115 to 118
** To fulfill creepage/clearance acc. UL 61800-5-1 without additional protection (insulation). Creepage/clearance can vary depending on applicable standard and must be reviewed by customer. Creepage/clearance may be reduced when additional protection (insulation) is provided.

Filter Signal And Earth Terminals

Terminal type	Screw thread	Screw torque [Nm]	[lbs·in]	Frame size
Signal	M3*	0.5	4.4	All
Earth (PE)	M5	2.2	19.5	A
Earth (PE)	M6	4	35.4	B, C
Earth (PE)	M8	9	79.7	D, E
Earth (PE)	M10	17	150.5	F, G, H

* Max width cable lug = 7 mm

Filter Selection Table @ 380 V / 60 Hz – IP 20 Enclosure

Filter	Rated load power @ 380 V/60 Hz [kW]	[HP]	Motor drive input current [Arms]***	Rated filter input current [Arms]	Weight [kg]	[lbs]	Typical losses [W]****	Terminal	Frame size
FN 3442-1-110-E2_ _ _ _ _*	0.9	1.2	2	1.37	7	15	50	110	A
FN 3442-2-110-E2_ _ _ _ _*	1.7	2.4	4	2.69	9	20	67	110	A
FN 3442-4-112-E2_ _ _ _ _*	2.9	4	7	4.57	11	24	116	112	B
FN 3442-6-112-E2_ _ _ _ _*	4.4	6.	11	6.91	14	31	132	112	B
FN 3442-8-112-E2_ _ _ _ _*	5.9	8	14	9.29	18	40	160	112	C
FN 3442-12-112-E2_ _ _ _ _*	8.7	12	21	13.8	20	44	237	112	C
FN 3442-16-113-E2_ _ _ _ _	11.9	16	27	18.5	31	68	294	113	D
FN 3442-20-113-E2_ _ _ _ _	14.9	20	34	23.1	35	77	351	113	D
FN 3442-24-113-E2_ _ _ _ _	17.4	24	44	27.8	40	88	354	113	D
FN 3442-32-115-E2_ _ _ _ _	23.8	32	52	37.2	46	101	459	115	E
FN 3442-40-115-E2_ _ _ _ _	29.3	40	66	46.2	57	126	571	115	E
FN 3442-48-115-E2_ _ _ _ _	35.6	48	83	55.6	65	143	589	115	E
FN 3442-60-115-E2_ _ _ _ _	44.3	60	103	69.3	67	148	821	115	F
FN 3442-80-115-E2_ _ _ _ _	59.4	80	128	92.5	90	198	1028	115	F
FN 3442-100-116-E2_ _ _ _ _	73.6	100	165	115	125	276	1067	116	G
FN 3442-120-116-E2_ _ _ _ _	88.7	120	208	139	146	322	1143	116	G
FN 3442-160-118-E2_ _ _ _ _	118	160	240	184	187	412	1538	118	H
FN 3442-200-118-E2_ _ _ _ _**	147	200	320	231	204	450	1411	118	H
FN 3442-240-118-E2_ _ _ _ _**	177	240	403	279	273	602	1775	118	H

* Filter rating which does not require forced cooling or fan module
** Filter rating which does not require RC damping module for rectifiers with EMI filter
*** Motor drive input current without harmonic filter
**** Typical losses @ 45°C, 380V, 60Hz and rated load power

Filter Power Terminals

Terminal designation*	Screw thread	Stranded wire AWG	Stranded wire [mm²]	Screw torque [Nm]	[lbs·in]	Max width** cable lug [mm]	Frame size
110	M3	14-22	0.4-2.5	0.5	4.4	7	A
112	M4	10-22	0.4-6	1.2	10.6	10	B, C
113	M6	6-18	0.75-16	3	26.6	15	D
115	M8	1/0-8	10-50	8	70.8	15	E, F
116	M8	3/0-8	10-95	8	70.8	17	G
118	M10	3/0-500 kcmil	95-240	10	88.5	35	H

* Recommended connector type: wire or cable lug for 110 to 113, only cable lug for 115 to 118
** To fulfill creepage/clearance acc. UL 61800-5-1 without additional protection (insulation). Creepage/clearance can vary depending on applicable standard and must be reviewed by customer. Creepage/clearance may be reduced when additional protection (insulation) is provided.

Filter Signal And Earth Terminals

Terminal type	Screw thread	Screw torque [Nm]	[lbs·in]	Frame size
Signal	M3*	0.5	4.4	All
Earth (PE)	M5	2.2	19.5	A
Earth (PE)	M6	4	35.4	B, C
Earth (PE)	M8	9	79.7	D, E
Earth (PE)	M10	17	150.5	F, G, H

* Max width cable lug = 7 mm

Product selector

FN 34nn-xxx-yyy-

- **X**
- **R** with RC damper
  X without RC damper
- **J** with trap disconnect jumper
  S with switch
  X without jumper and without switch
- **A** with power supply
  X without power supply
- **F** with fan
  X without fan
- **0** for IP00
  2 for IP20
- **E** for IP
- Terminal designation
- Power rating in kw (HP)

Filter Configurations

E0XXXXX

- For rectifiers without DC-link choke

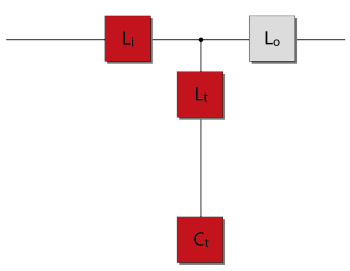

E0FAXRX

- For rectifiers without DC-link choke and with EMI filter
- Filters contain fan, aux. power supply and RC damper module

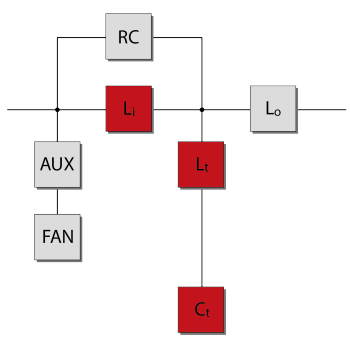

E0FAJRX and E2FAJRX

- For rectifiers without DC-link choke and with EMI filter
- Filters contain fan, aux. power supply, RC damper module and trap disconnect jumper

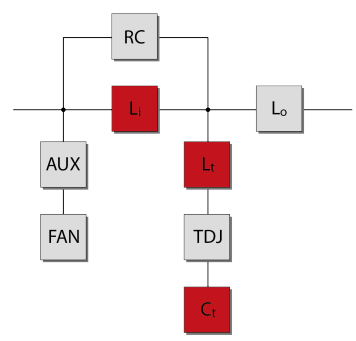

Mechanical Data Of IP 00 Enclosure

Frame sizes A-F

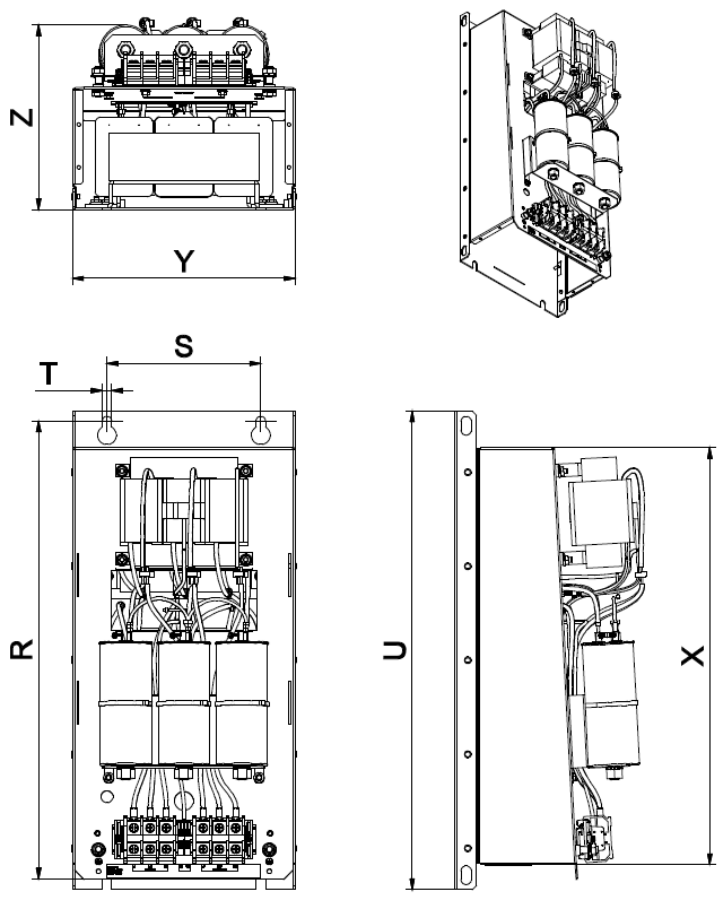

Frame sizes G and H

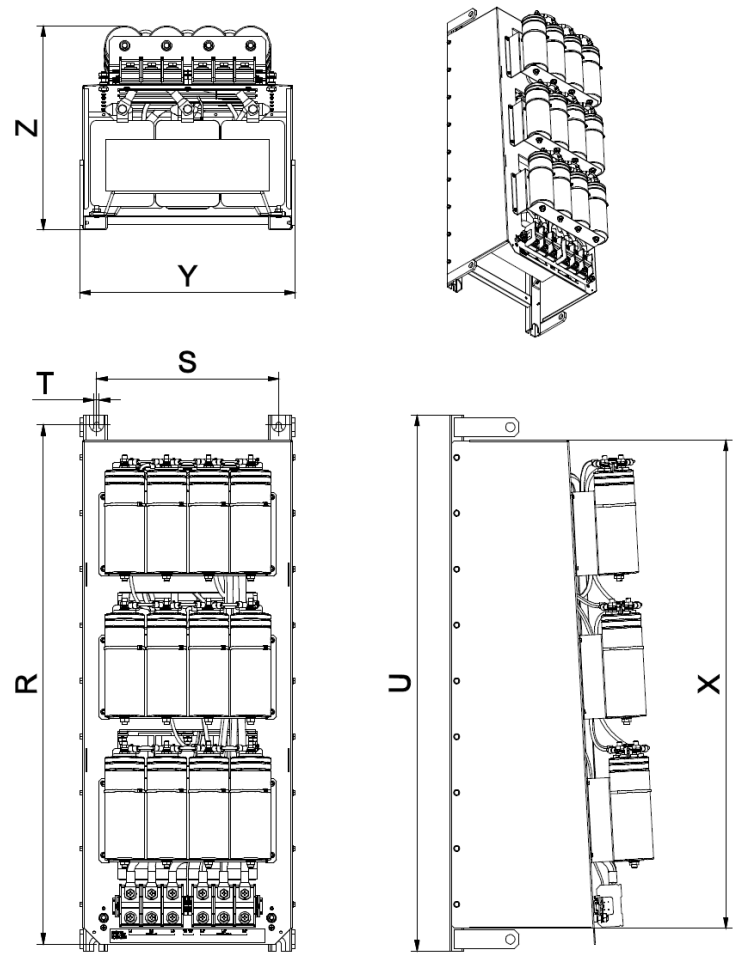

Dimensions

Frame	Dimensions in [mm]							Dimensions in [in]						
		Drill pattern		Base			Volume		Drill pattern		Base			Volume
	R	S	T	U	X	Y	Z	R	S	T	U	X	Y	Z
A	340	120	7	360	302	160	185	13.4	4.7	0.3	14.2	11.9	6.3	7.3
B	405	120	7	425	370	180	206	15.9	4.7	0.3	16.7	14.6	7.1	8.1
C	460	150	7	483	430	210	221	18.1	5.9	0.3	19.0	16.9	8.3	8.7
D	540	180	11	560	491	260	252	21.3	7.1	0.4	22.0	19.3	10.2	9.9
E	680	220	11	705	635	290	319	26.8	8.7	0.4	27.8	25.0	11.4	12.6
F	730	250	11	752	684	340	343	28.7	9.8	0.4	29.6	26.9	13.4	13.5
G	920	280	11	960	863	353	386	36.2	11.0	0.4	37.8	34.0	13.9	15.2
H	1115	390	11	1150	1053	462	456	43.9	15.4	0.4	45.3	41.5	18.2	18.0

Inlet Air Flow Required For Cooling

Frame size	Min air volume*	
	[m^3/h]	CFM [ft3/min]
A, B, C	0	0
D	128	75
E	204	120
F, G	408	240
H	612	360

* External air flow required for filter configurations without embedded ventilation

Mechanical Data Of IP 20 Enclosure

Frame sizes A-D

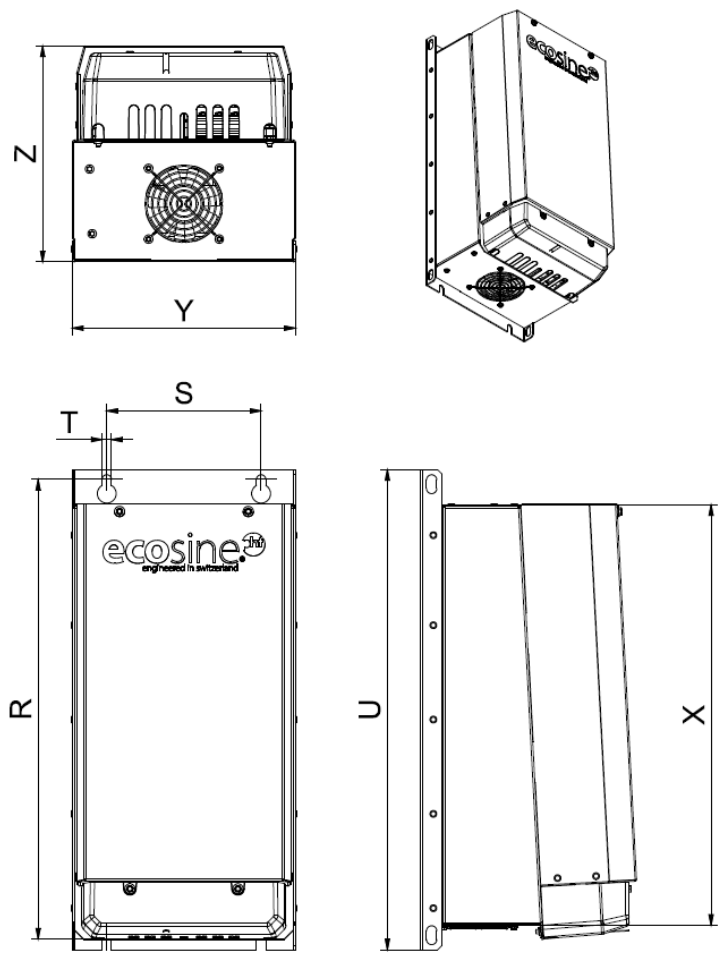

Frame sizes E-H

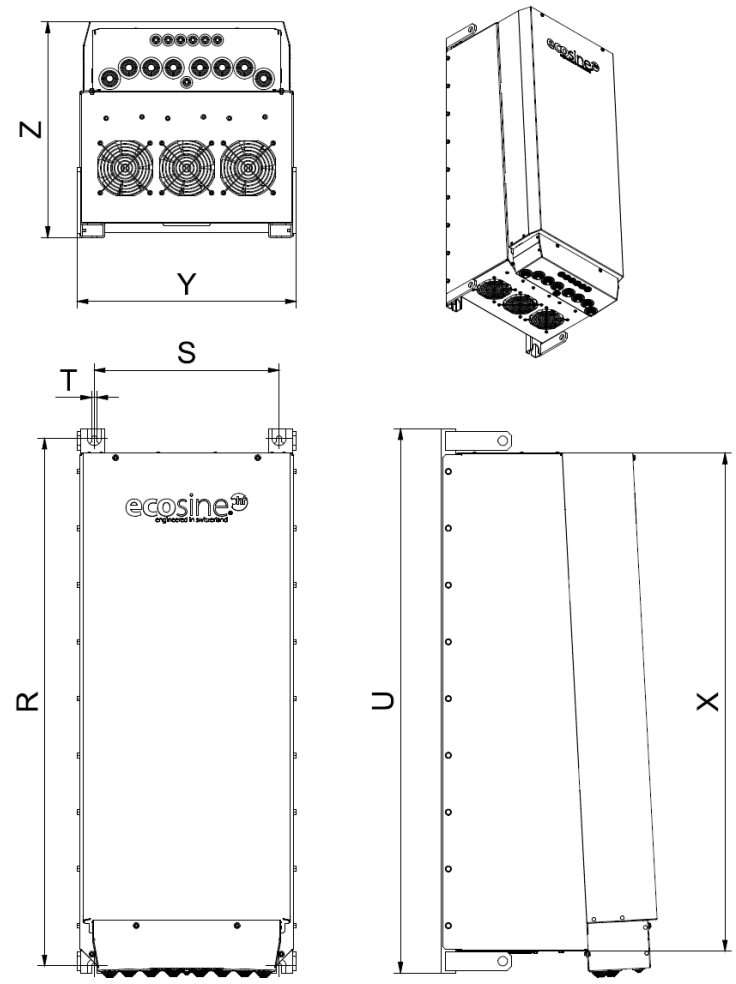

Dimensions

Frame	Dimensions in [mm]							Dimensions in [in]						
		Drill pattern		Base			Volume		Drill pattern		Base			Volume
	R	S	T	U	X	Y	Z	R	S	T	U	X	Y	Z
A	340	120	7	360	302	160	185	13.4	4.7	0.3	14.2	11.9	6.3	7.3
B	405	120	7	425	370	180	206	15.9	4.7	0.3	16.7	14.6	7.1	8.1
C	460	150	7	483	430	210	221	18.1	5.9	0.3	19.0	16.9	8.3	8.7
D	540	180	11	560	491	260	252	21.3	7.1	0.4	22.0	19.3	10.2	9.9
E	680	220	11	705	635	290	319	26.8	8.7	0.4	27.8	25.0	11.4	12.6
F	730	250	11	752	684	340	343	28.7	9.8	0.4	29.6	26.9	13.4	13.5
G	920	280	11	960	863	353	386	36.2	11.0	0.4	37.8	34.0	13.9	15.2
H	1115	390	11	1150	1053	462	456	43.9	15.4	0.4	45.3	41.5	18.2	18.0

Inlet Air Flow Required For Cooling

Frame size	Min air volume*	
	[m3/h]	CFM [ft3/min]
A, B, C	0	0
D	128	75
E	204	120
F, G	408	240
H	612	360

* External air flow required for filter configurations without embedded ventilation

Headquarters, Global Innovation and Development

Switzerland
Schaffner Group
Industrie Nord
Nordstrasse 11e
4542
Luterbach
+41 32 681 66 26
info@schaffner.com

Sales and Application Centers

Switzerland
Schaffner EMV AG
Industrie Nord
Nordstrasse 11e
4542
Luterbach
+41 32 681 66 26
switzerlandsales@schaffner.com

China
Schaffner EMC Ltd. Shanghai
Building C
T20-3 C No 565 Chuangye Road Pudong district
C 幢 上海市浦东新区创业路 565 号 T20-3
201201
Shanghai
+ 86 21 38 139 500
cschina@schaffner.com

Singapore
Schaffner EMC Pte Ltd.
Blk 3015A Ubi Road 1 #05-09 Kampong Ubi Industrial Estate
408705
Singapore
+65 63773283
singaporesales@schaffner.com

To find your local partner within Schaffner's global network schaffner.com

© 2023 Schaffner Group

The content of this document has been carefully checked and understood. However, neither Schaffner nor its subsidiaries assume any liability whatsoever for any errors or inaccuracies of this document and the consequences thereof. Published specifica-tionsw are subject to change without notice. Product suitability for any area of application must ultimately be determined by the customer. In all cases, products must never be operated outside their published specifications. Schaffner does not guarantee the availability of all published products. This disclaimer shall be governed by substantive Swiss law and resulting disputes shall be settled by the courts at the place of business of Schaffner Holding AG. Latest publications and a complete disclaimer can be downloa-ded from the Schaffner website. All trademarks recognized.